Workshop
WFE

2009 International Microwave Symposium

Stability Issues in the Design of High Power Amplifiers and Oscillators

S. Mons[1], T. Reveyrand[1], T. Gasseling[2], JC. Nallatamby[1], R. Quéré[1], E. Ngoya[1]

(1) Xlim Lab, University of Limoges - 123, Av. Thomas 87060 Limoges, France
(2) Amcad Engineering - Ester 87000 Limoges, France

✆ : +33 555-457296 ✉ : +33 555-457666
✉ : sebastien.mons@xlim.fr http://www.xlim.fr

Outline

Small-Signal Stability Analysis

K-Factor, Normalized Determinant Function, Characteristic Determinant

Large Signal Analysis

NDF, Open loop analysis, Oscillator analysis

Measurement

Hot S parameters, High impedance probes

RF-SOC problematic

Full nodal stability analysis

Conclusion

A Stability criterion for designer

Outline

Motivation

Assessing Stability is a difficult task from the theorical point of view !!

Checking stability before fabrication is mandatory for RF engineers !!

As performances demand increases, assuring robustly stable behavior will be a key point for commercial CAD tools…

…proposed solutions must be rigorous, low time consuming and compatibles with CAD utilities

Practical solutions

Efficient simulation methods based on perturbation theory have already been proposed for stability prediction

Characterization methods have been investigated for stability predicting

Small Signal Analysis : *K-factor Criterion*

Origin

A linear quadripole is unconditionally stable if it does not reflect a higher power than the received one, for any passive termination

Definition

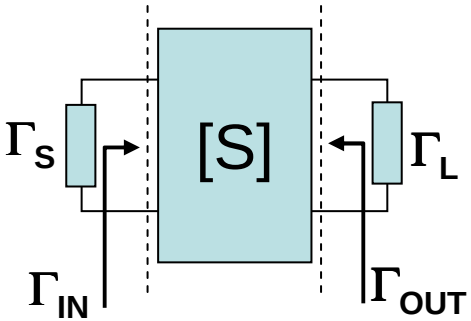

$$\begin{cases} |\Gamma_L|<1 \Rightarrow |\Gamma_{IN}|<1 \\ |\Gamma_S|<1 \Rightarrow |\Gamma_{OUT}|<1 \end{cases} \Rightarrow \begin{cases} K = \dfrac{1 - |S_{11}|^2 - |S_{22}|^2 + |\Delta|^2}{2\,|S_{21}.S_{12}|} > 1 \\ |\Delta| = |S_{21}.S_{12} - S_{11}.S_{22}| > 1 \end{cases}$$

Use

K>1 & |Δ| <1 unconditional stability

K<1 conditional stability → stability circles →

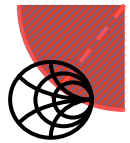

Conditional Stability

[1962] JM. Rollet, *Stability and power gain invariants of linear two ports*, IEEE Trans. On Circuit Theory, pp. 29-32.

Limitations

Based on the reduction of a complex circuit → a pole-zero compensation is still possible

Criterion validity → Stability of <u>stable</u> unloaded circuit

[1993] A. Platzker, W. Struble : *A rigorous yet simple method for determining Stability of linear N-ports Networks* GaAs IC Symposium Digest, pp. 251-254, 1993.

Small Signal Analysis : *Open loop analysis*

Return Difference Function (One device circuit)

1 - Direct Resolution :

$$RD = \frac{\Delta}{\Delta_o} \text{ with } \begin{cases} \Delta = \text{determinant} \\ \Delta_o = \Delta \text{ (active sources off)} \end{cases}$$

2 - Undirect resolution :

$$RD = 1 + RR$$

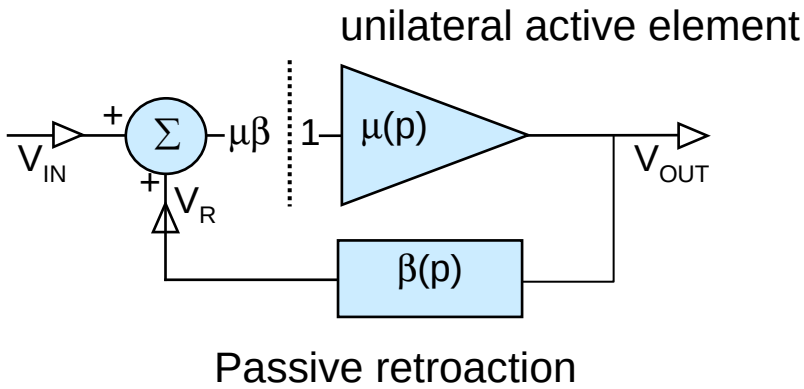

➡ *RD cannot have PRP poles* ➡ *Nyquist analysis*

Normalized Determinant Function (N-devices circuit)

1 - Direct Resolution : $NDF = \frac{\Delta}{\Delta_{ON}}$ ➡ *NDF cannot have PRP poles* ➡ *Nyquist analysis*

2 - Undirect resolution : $NDF = \prod_{i=1}^{n} (RD_i)$ With $RD_i = \frac{\Delta}{\Delta_{oi}}$ & $\Delta_{oi} = \Delta(gm_o \ldots gm_{i-1}=0)$

[1994] A. Platzker, W. Struble, *Rigorous determination of the stability of linear N-Node circuits from network determinants and the appropriate role of the stability factor K of their reduced two-ports,* INMMC Workshop, Duisburg, pp. 93-107.

Small Signal Analysis : *Open loop analysis*

Practical evaluation

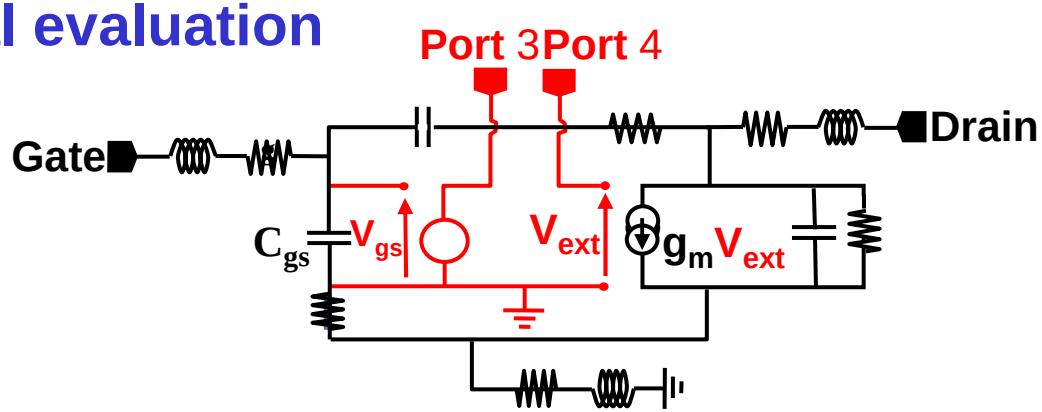

4-ports model

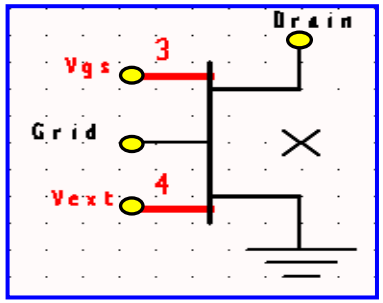

Possible States of the transistors

On	Off	Open-loop
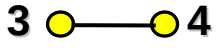	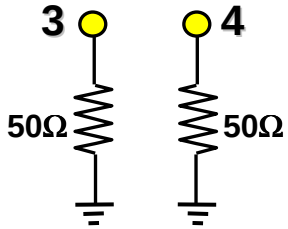	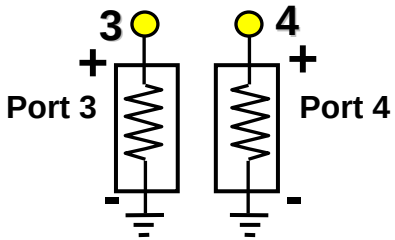

$$RR_i = -\frac{V_{GS}}{V_{EXT}} = -\frac{S_{34}}{2}$$

➡ ***N - Sparameters simulations*** ➡ $NDF = \prod_{i=1}^{N}(1 + RR_i)$

Small Signal Analysis : *C - Band amplifier*

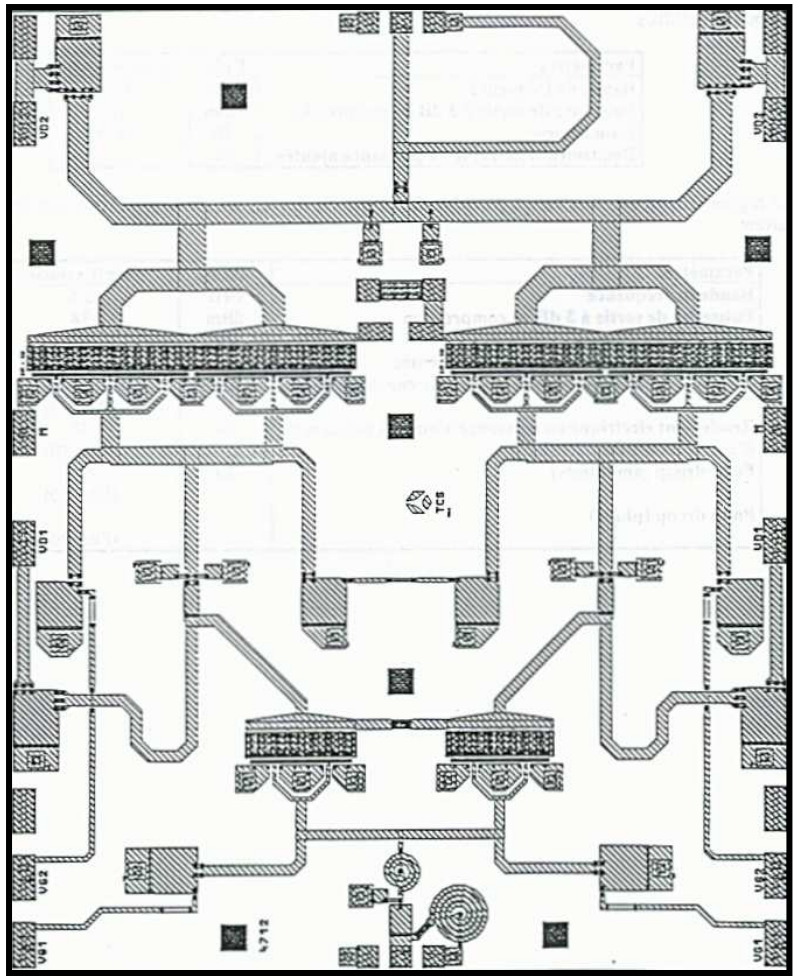

Design specifications :

Band	C
P_{OUT}	> 5 Watt

AB-class, pulse mode

Pulsed mode

P_{out} (- 3 dB)	38 dBm
Gain	> 26.5 dB
PAE	36%
K-Factor	Stable

Oscillation phenomena appear during the characterization step

Small Signal Analysis : *C - Band amplifier*

Bias : V_g = -3V, V_d = 10V

Indexing of the transistors

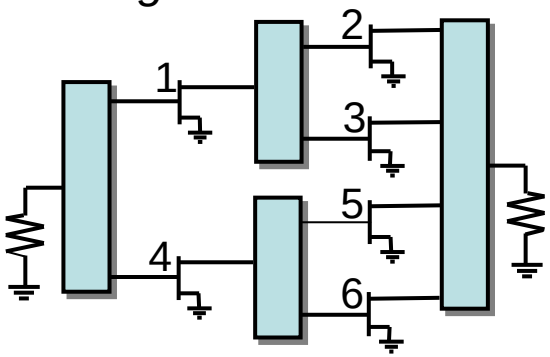

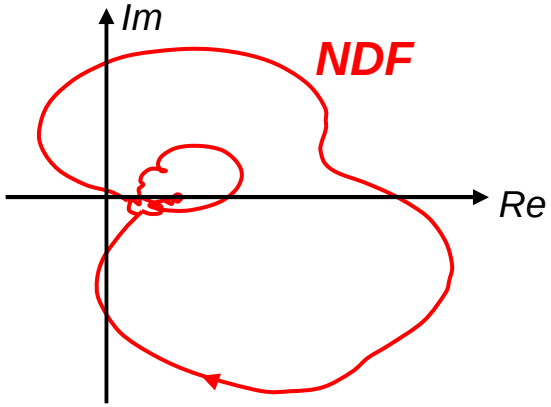

K-factor + Stability circles:
conditional Stability

NDF :
Unconditional Stability

Bias : V_g = -3V, V_d = 3V

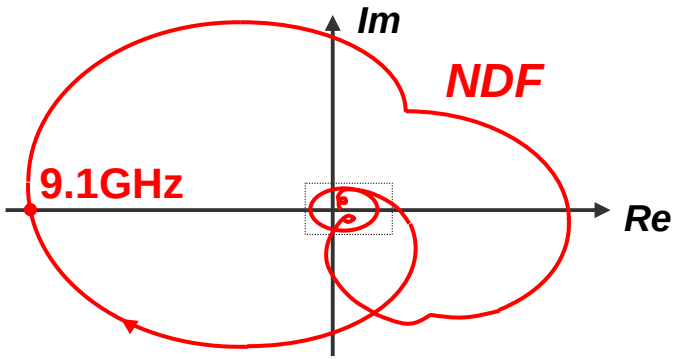

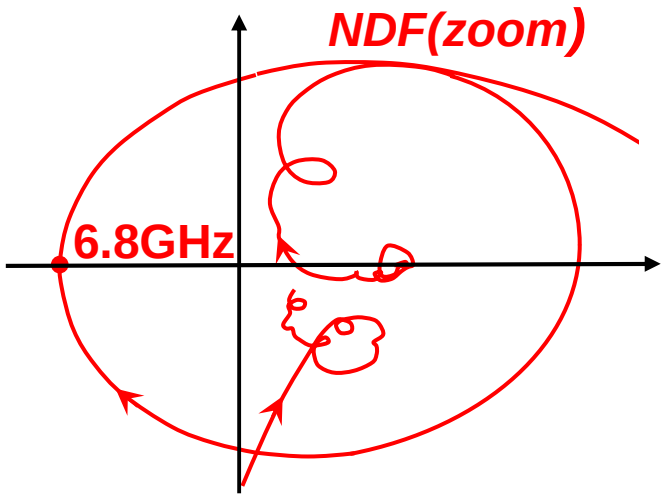

Two clockwise encirclements…

$Fosc_1$ = 6,8 ???

$Fosc_2$ = 9,1 ???

Small Signal Analysis : *C - Band amplifier*

Bias : V_g = -3V, V_d = 3V (NDi plots)

NDF= $RD_1 . RD_2 . RD_3 . RD_4 . RD_5 . RD_6$

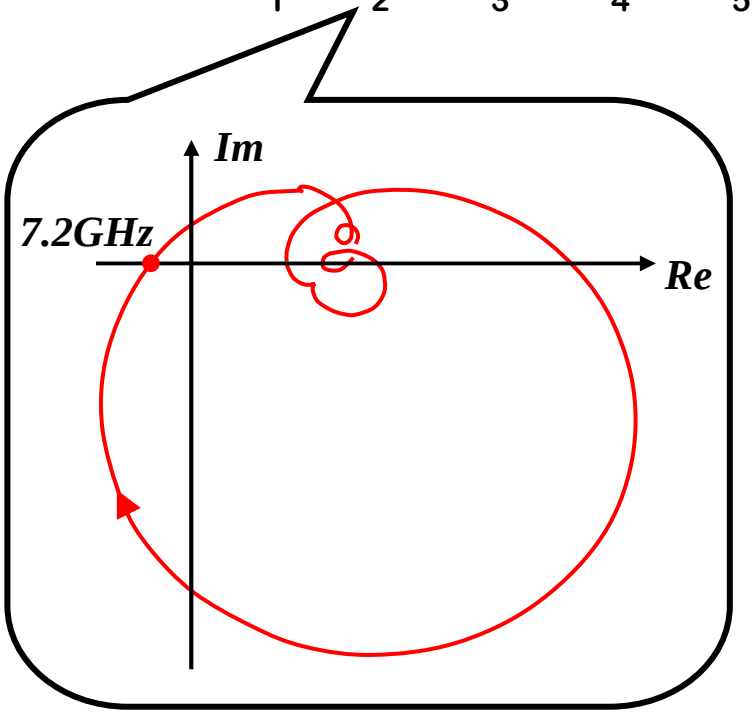

2nd stage : a 2nd order pole is located near 7 GHz…

Localization of the unstable mode

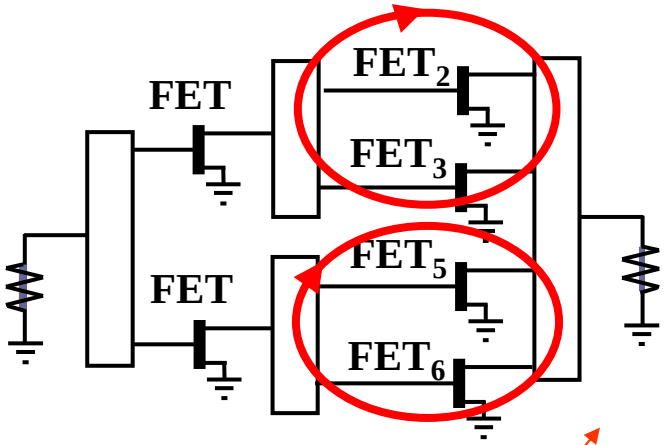

Design Correction R_{opt}

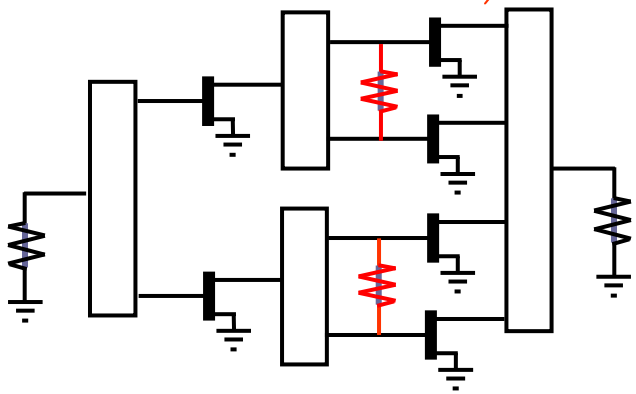

Small Signal Analysis : *Conclusion*

Criteria

Stability analysis is performed by using both NDF and K-factor criteria

Implementation

K-factor : Integrated on all Commercially available tools

NDF : should be integrated on Commercially available tools

Advantages

RD_i can be used to locate an unstable mode → f_{osc} estimated, nature

Stability margins can be directly optimized during the design step → Circuit correction

Statistical studies are possible

It is necessary to have fine transistor modeling

For Black box model, NDF is evaluated at the input using a circulator :

[1993] M. Othomo : *Stability analysis and numerical simulation of multi-device amplifiers* IEEE trans. Microwave Theory Tech., pp. 983-991, 1993.

Large Signal Analysis : *Perturbed HB equation*

Characteristic System : *Linearization of the large signal steady state*

I : Identity
J : Jacobian
ΔV : Control voltages at $k\omega_{in} \pm \Omega$

$$(I - Z(\Omega).U).\ \Delta V = 0$$

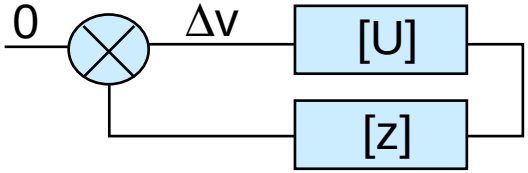

Nyquist analysis of $\Delta(j\omega) = \prod_{i=-n}^{n} (\lambda_i)$ ***... provided there is no pole / zero cancellation***

[1996] R. Quéré, E. Ngoya, S. Mons, J. Rousset, M. Camiade, J. Obregon, *Linear and nonlinear stability analysis of microwave circuits,* GaAs 96, 7INV1, Paris, Invited paper

Reduced characteristic System : *defining NDF formulation*

$$(I - Z' \times G_M) \times \Delta V_{gs} = 0$$

Nyquist analysis of $NDF = \prod_{i=-n}^{n} (RD_i)$

G_M *is the conversion matrix of all transistor transconductances*

RR_i is the Return Ratio matrix of the ith source when G_{M_1}... $G_{M\ i-1}$ are set to zero

[1999] S. MONS, J.C. NALLATAMBY, R. QUERE, P. SAVARY, J. OBREGON : *A unified approach for the linear and nonlinear stability analysis of microwave circuits using commercially available tools*, IEEE Trans. on Microwave Theory and Techniques (special issue on 1999), Vol. 47, n°12, pp. 2403-2409

Large Signal Analysis : *Open loop analysis*

Practical evaluation

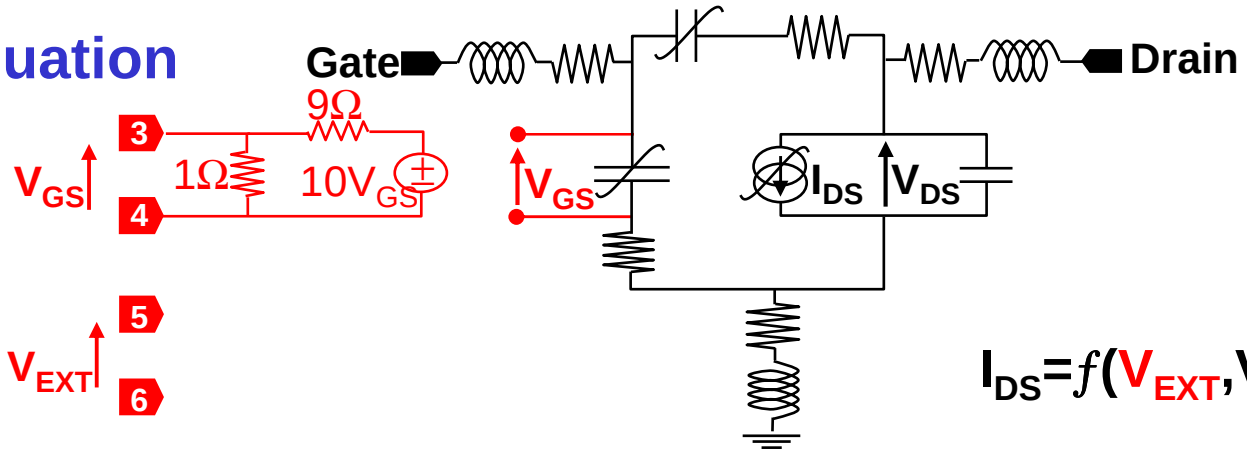

$$I_{DS}=f(V_{EXT},V_{DS})$$

Possible states of the transistors

On	Off	Open-loop
3 ● — ● 5 4 ● — ● 6	3 ● — FILTER — ● 5 4 ● — FILTER — ● 6	$e_o\cos(\Omega t)$ 3 ● — ∿ — ● 5 4 ● — FILTER — ● 6

Each frequency position of Ω determine a Column of RR_i

The filter canceles k $\omega_{in} \pm \Omega$ intermodulation products

➡ **H.B (mixer mode) with $\Omega \in$] DC, $^1/_2$ F_{in} [**

Large Signal Analysis : *HBT Ku-band amplifier*

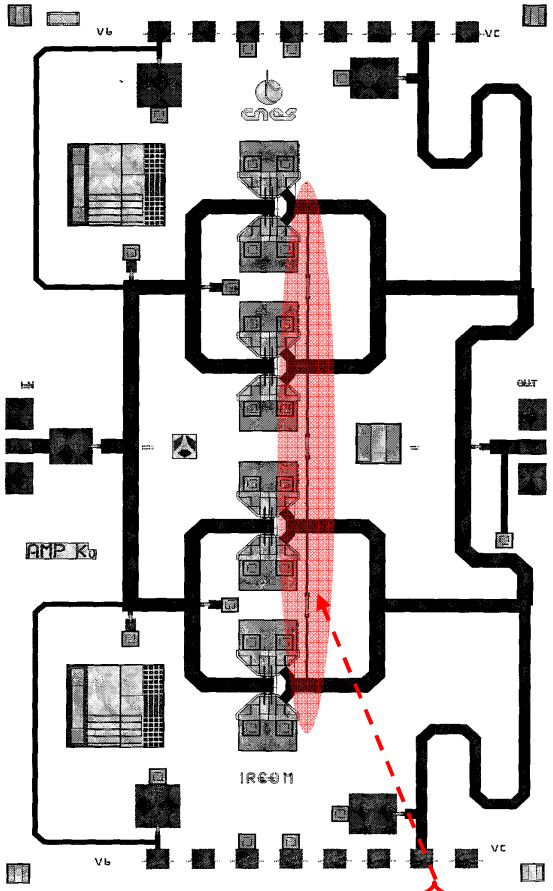

Bondings ensure a stable state of the bias point

Design Specifications

F_o	12.6 GHz
Bandwith	500 MHz
P_{out}	1 W
C/I	20dB
Size	2.5×4.5 mm^2

Simulation results

P_{out}	30.5 dBm
PAE	35%
K- factor	Stable
NDF(linear)	Stable

Small-signal analysis

Nyquist plot of NDF (V_{co}= 9V, I_c = 120mA)

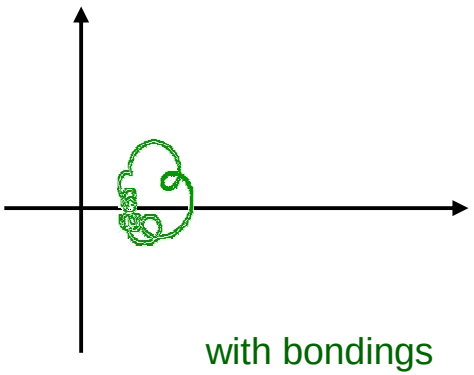

with bondings

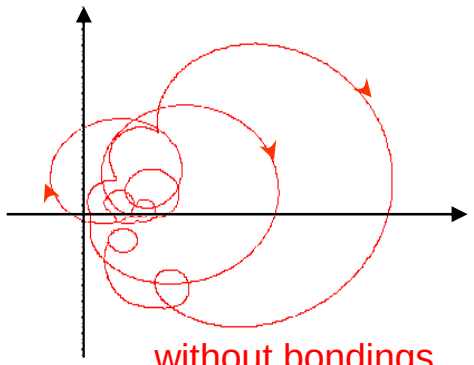

without bondings

Large Signal Analysis : *HBT Ku-band amplifier*

Drain current : 260mA

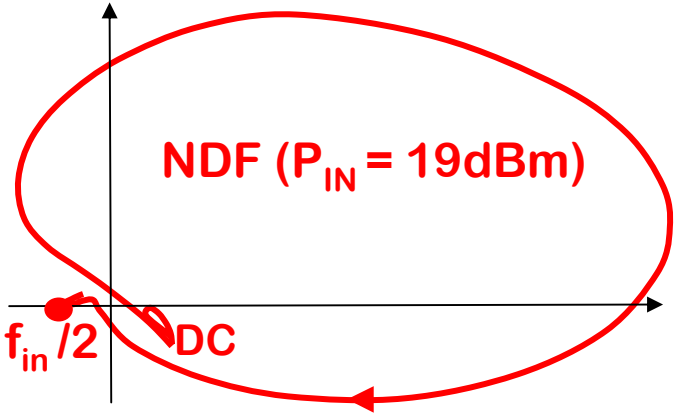

a half-clockwise encirclement ➔ division frequency phenomena

Drain current : 360mA

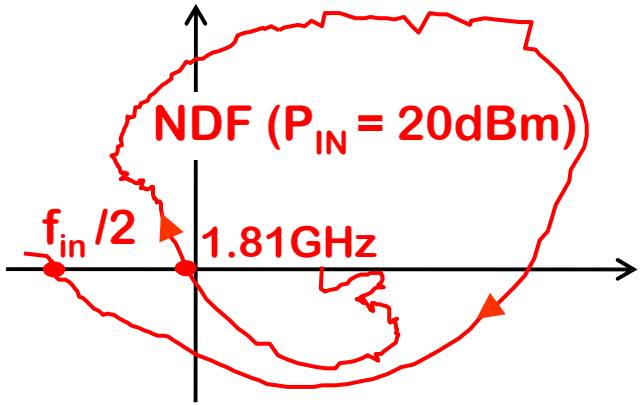

a half-clockwise encirclement ➔division frequency
a clockwise encerclement ➔free oscillation

Power spectrum
(P_{IN} = 18.6dBm)

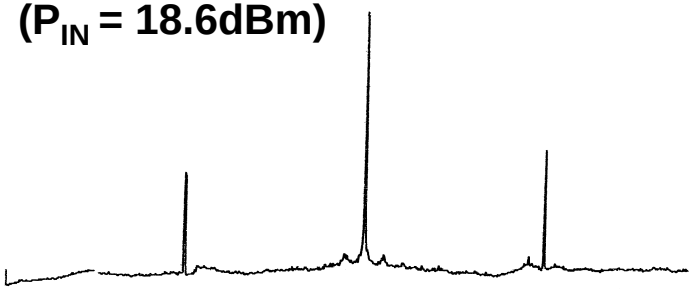

Power spectrum
(P_{IN} = 22.6dBm)

Discret lines Spectrum

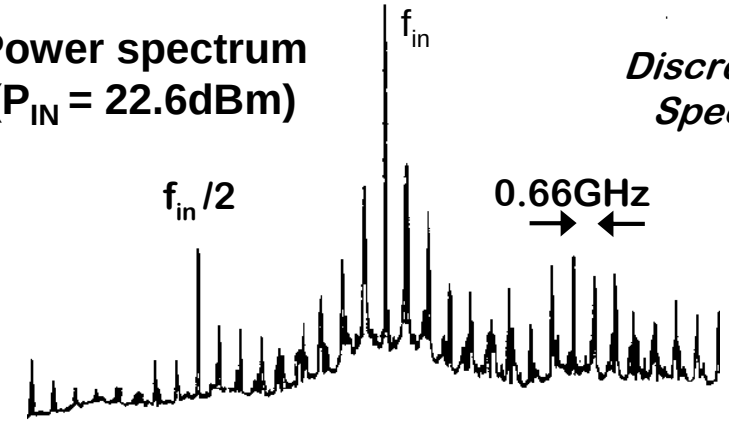

Large Signal Analysis : *Direct open-loop analysis*

Idea : The mathematical utility of the NDF is obtaining a function without poles PRP (undesirable information) representing the zero PRP (required information)

Each element of the RR matrix contains stability information (ie. PRP zeroes)

➔ RR matrix can be reduced to its central element RR_o

➔ For multistage PAs, a single open-loop analysis is sufficient per stage

However, it is necessary to be able to distinguish the zeros from the poles...

→ Bode's analysis of ND_o

Nyquist's criterion is difficult to apply (partial encirclements)

*Poles and zeros are distinguished by sweeping a significant parameter (**ie. P_{IN}**)*

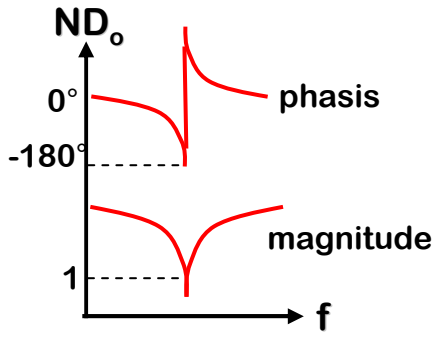

PRP zero

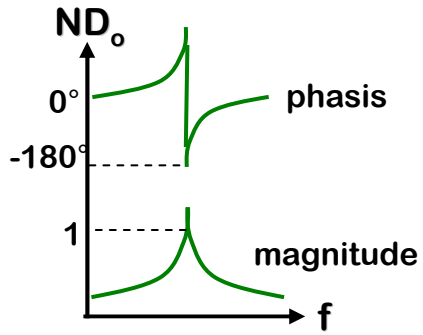

pole PRP

Advantages

Low Time consuming (due to high system reduction)

Possible integration to Commercially available tools

Easy to use

stability margins can be defined

[2002] A. ANAKABE, S. MONS, T. GASSELING P. CASAS, R. QUERE, J.M. COLLANTES, A. MALLET, *Efficient nonlinear stability analysis of microwave circuits using commercially available tools,* 32th European Microwave Conference (EuMC'02), Milan, 23-27 Sept. 2002

Large Signal Analysis : *X-band MMIC amplifier*

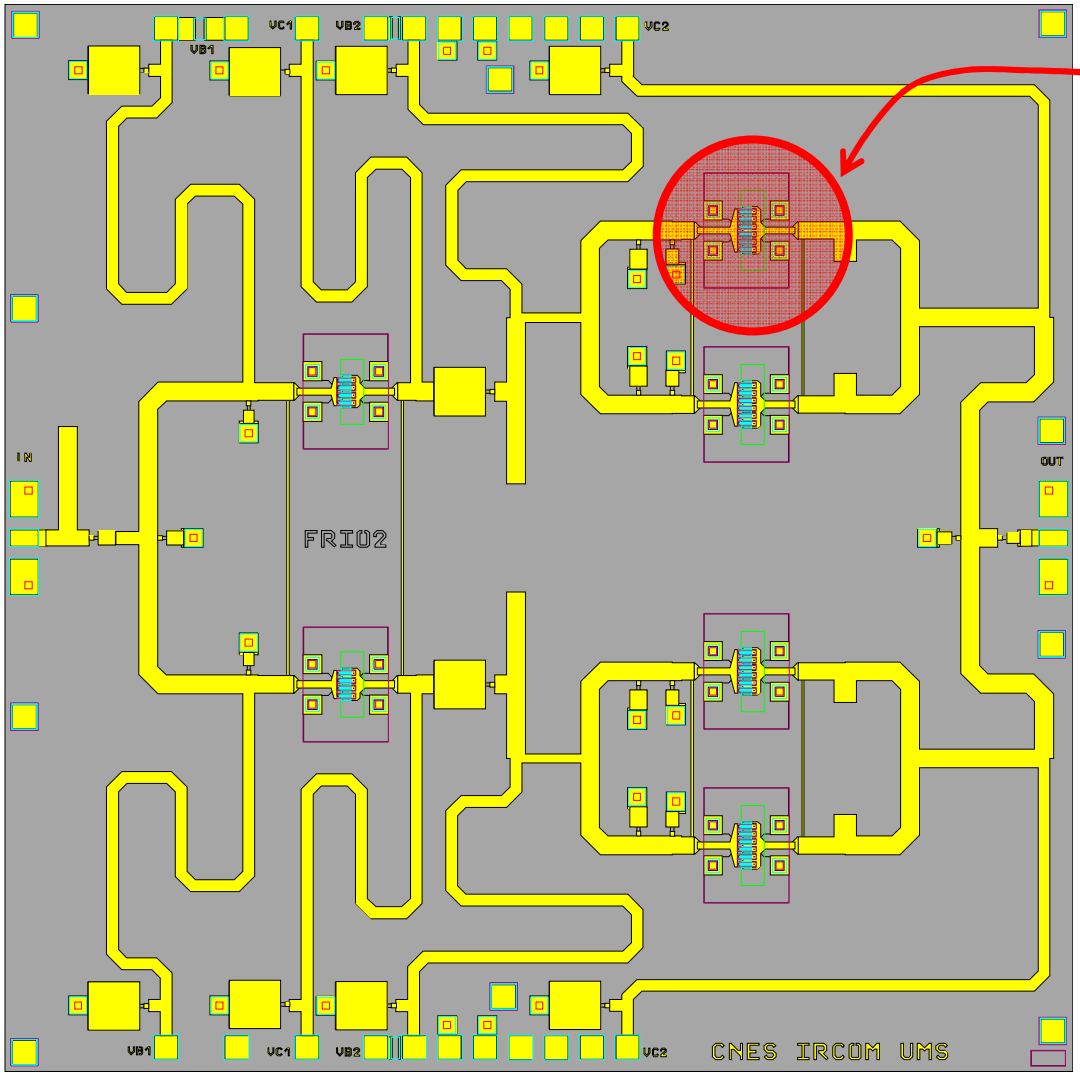

Direct open loop analysis

Design specifications

f_o	9.65 GHz
PAE	max
Bandwith	> 150MHz
P_{out}	33 dBm
T_{max}	60°

Frequency division is observed @ P_{out} > 29 dBm

Large Signal Analysis : *X-band MMIC amplifier*

Open-loop analysis : $ND_o = f(F_p)@\ F_{in}|_{P_{in}}$

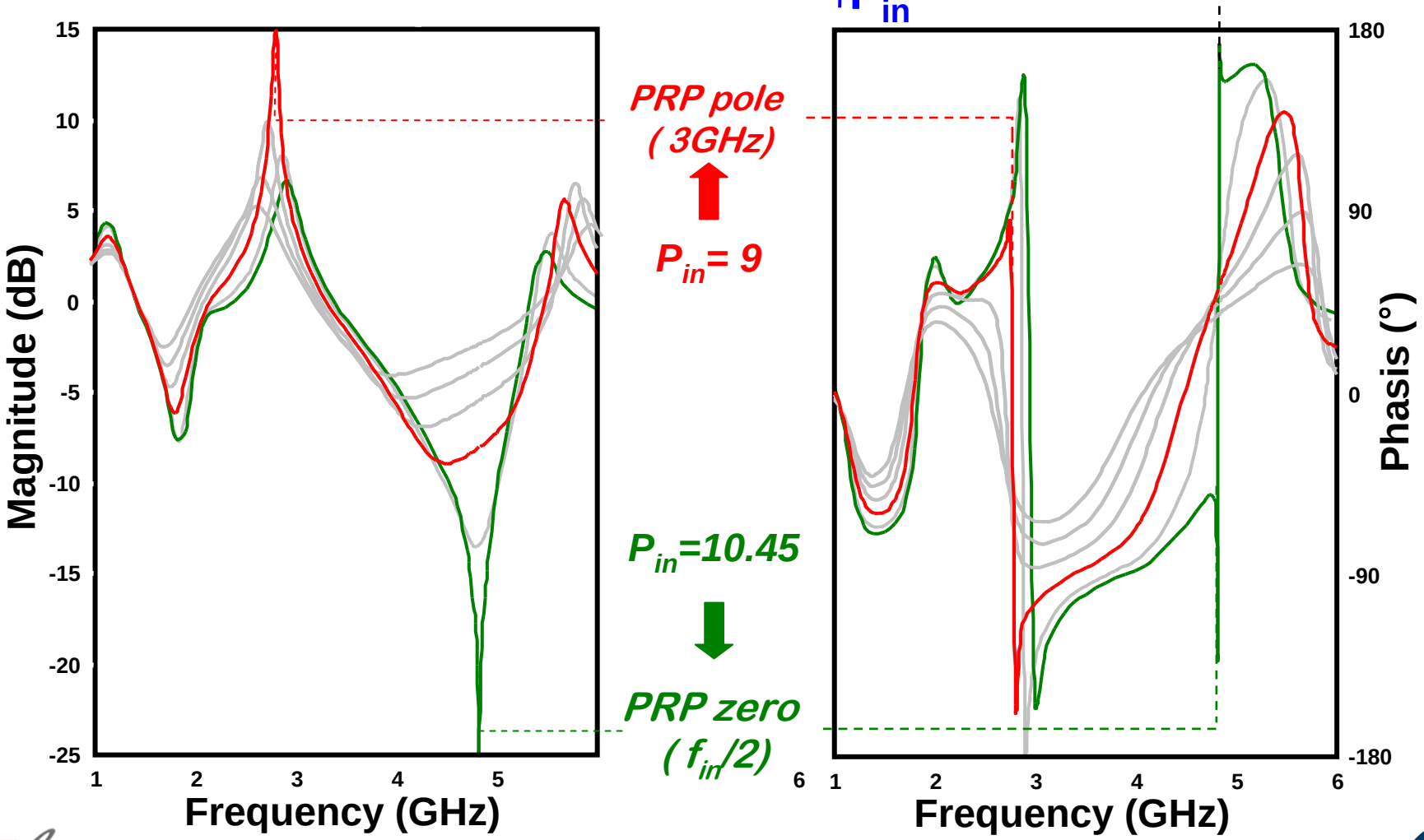

Large Signal Analysis : *X-band MMIC amplifier*

IMS 2009 JUNE 7-12 BOSTON MA

Once the oscillation is found, useless to sweep f ...

→ $ND_o(F_{osc}) = f(P_{in})$ @ F_{in}=9.65 GHz
with $F_{osc} = F_{in}/2$

division phenomena of the → first stage
→ second stage

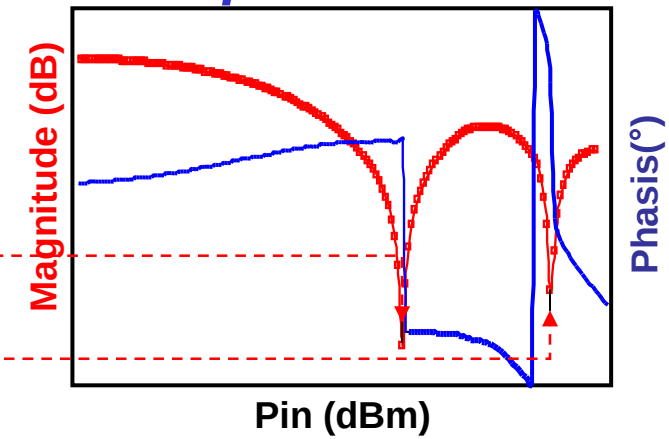

… the entire bifurcation map can be easily computed

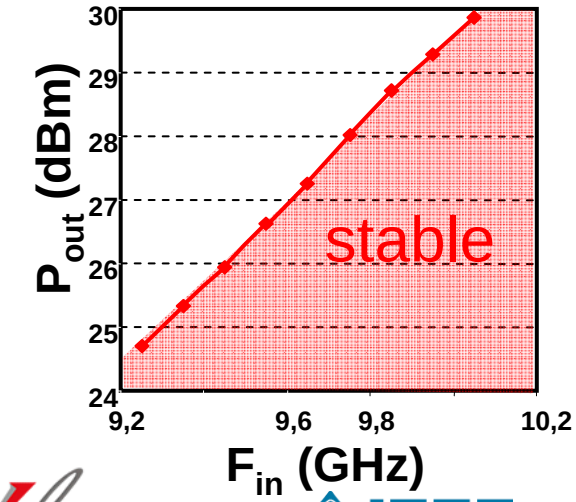

Moreover, stability margins can be directly defined…

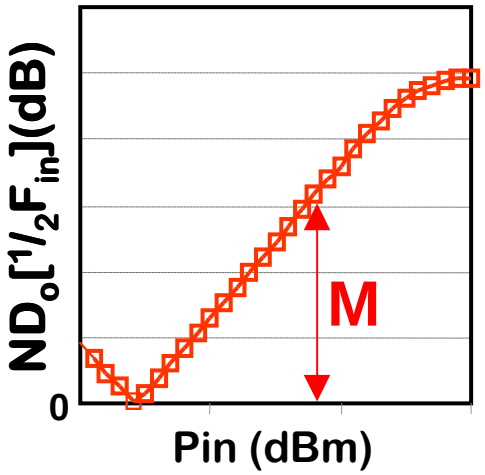

Xlim institut de recherche IEEE MTT-S cnrs

Oscillator Analysis : *Open loop approach*

The open loop gain concept

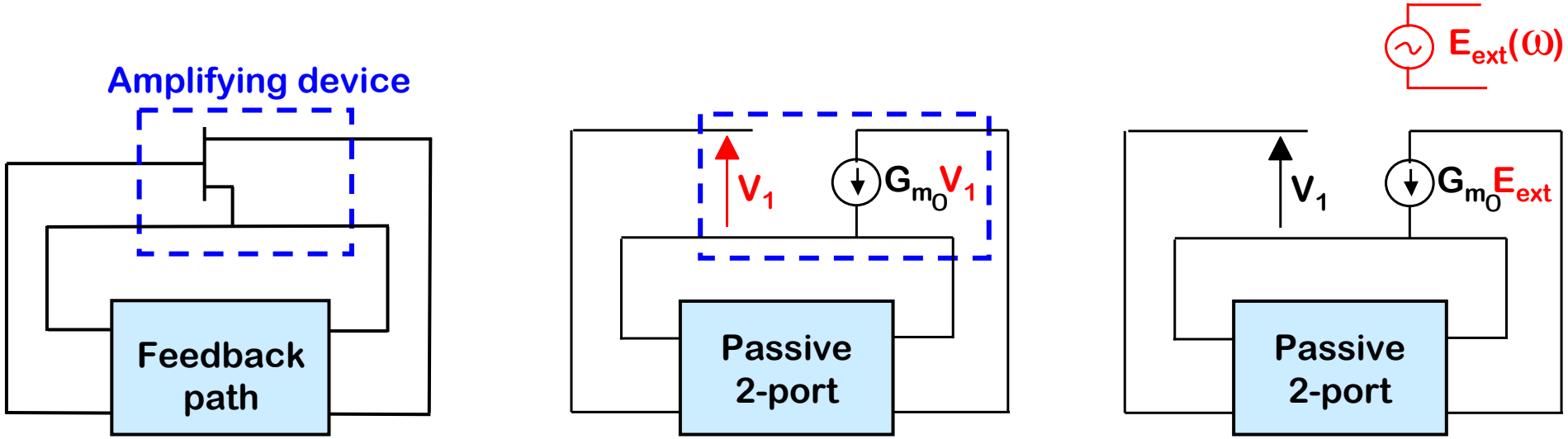

$$\tilde{G}_{OL}(j\omega) = \text{open loop gain} = \frac{\tilde{V}_1(j\omega)}{\tilde{E}_{ext}(j\omega)}$$

Oscillator Analysis : *Oscillating conditions*

Let's examine the open loop gain $\tilde{G}_{OL}(j\omega)$ around the frequencies

where $\begin{cases} \left|\tilde{G}_{OL}(\omega_O)\right| > 1 \\ \varphi_{OLG}(\omega_O) = \angle\tilde{G}_{OL}(\omega_O) \approx 0 \end{cases}$

➡ $\left|\tilde{G}_{OL}\right| > 1$

During the transient $\tilde{G}_{OL}$ reduces to a large signal operating point where $\left|\tilde{G}_{LS}(\omega_O)\right| = 1$

➡ $\varphi_{OLG}(\omega_O) = \angle\tilde{G}_{OL}(\omega_O) \approx 0$

During the transient $\varphi_{OLG}(\omega)$ shift in frequency to the operating point where :

$$\varphi_{LS}(\omega_O) = 0 \quad \text{and} \quad \omega_{O\,\text{large signal}} \approx \omega_{O\,\text{small signal}}$$

Oscillator Analysis : *Simulation results*

Linear open-loop gain

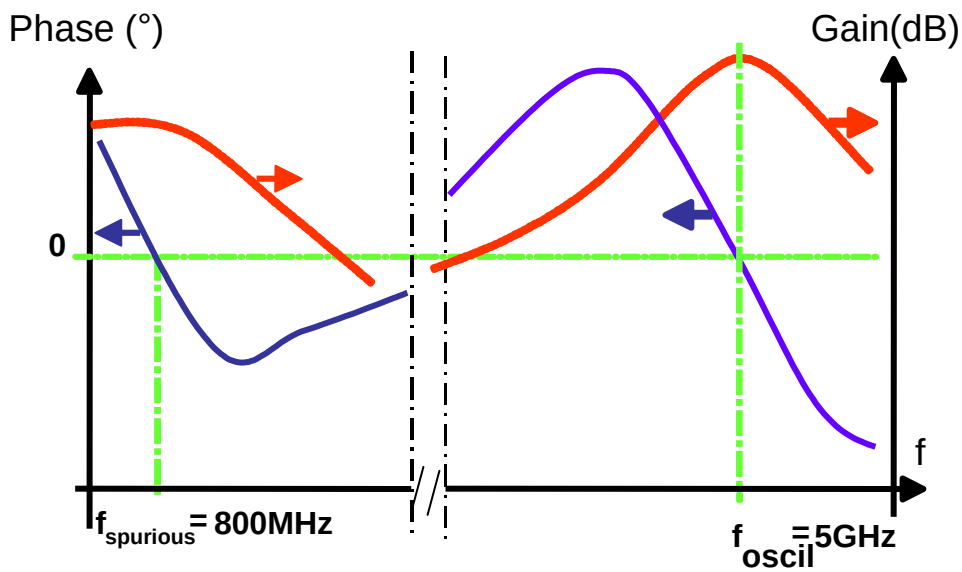

MMIC oscillator
(without circuit stabilization)

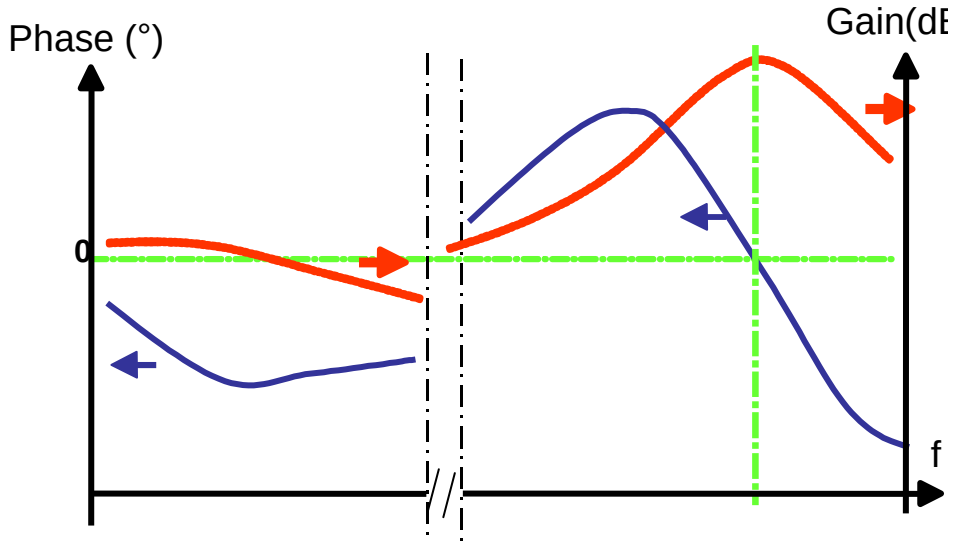

MMIC oscillator
(with circuit stabilization)

Oscillator Analysis : *Simulation results*

Linear-loop gain for a transistor oscillator

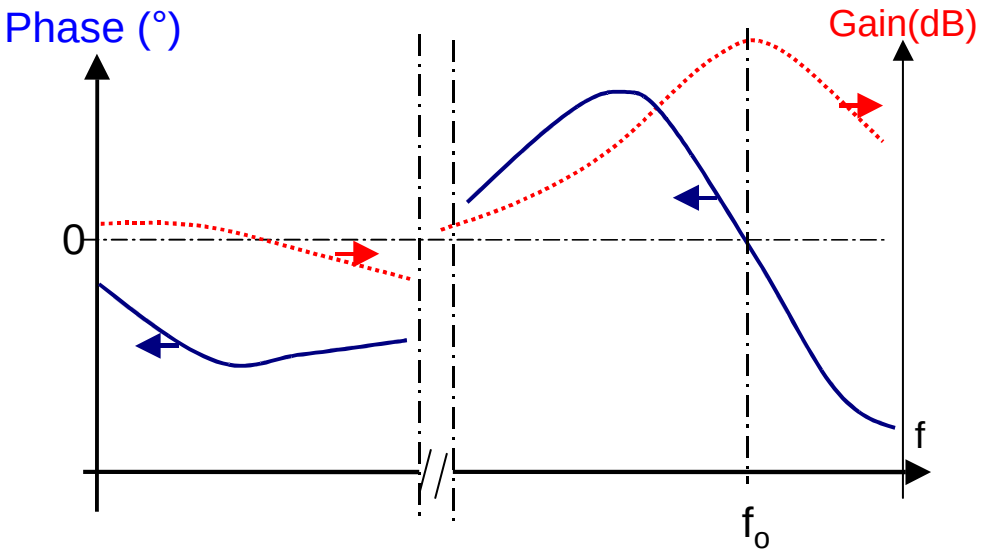

Are the previous conditions sufficient to find a stable oscillation ?

No, the local stability of the large signal operating point must be analyzed

Oscillator Analysis : *Bias circuits*

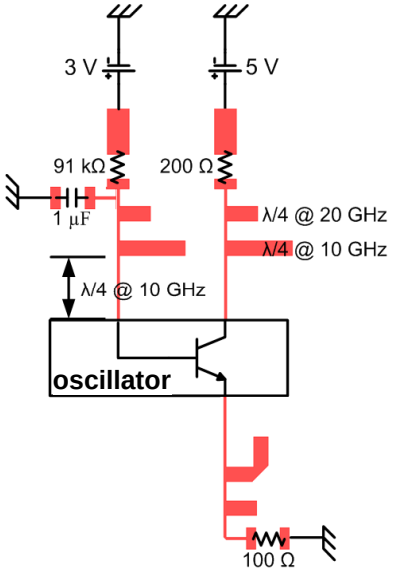

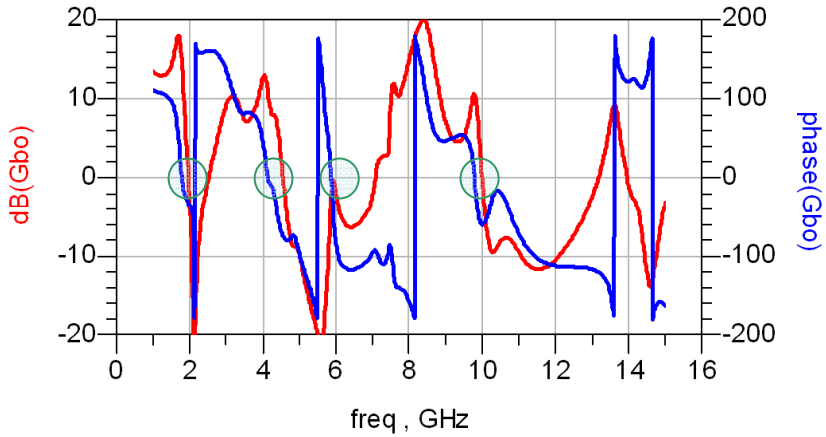

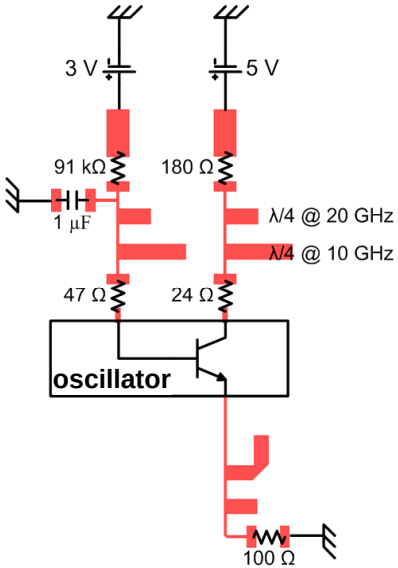

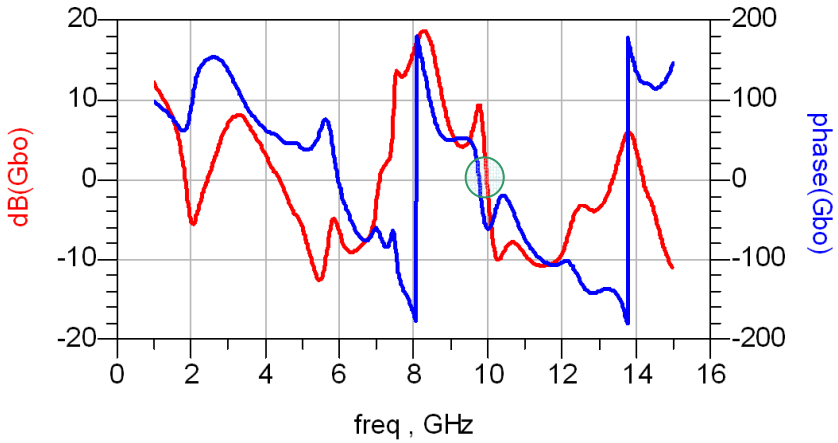

Oscillator Analysis : *Principle*

A first response can be given by a small signal linear analysis

$$\textit{If}\begin{cases} \left|\tilde{G}_{OL}(\omega_O)\right| > 1 \\ \varphi_{OL}(\omega_O) = \angle\tilde{G}_{OL}(\omega_O) = 0 \\ \left.\dfrac{d\varphi_{OL}}{d\omega}\right|_{\omega_O} < 0 \end{cases}$$

Then the final steady-state oscillation should be stable

Oscillator Analysis : *Principle*

Oscillations start in symmetrical oscillation circuits

In balanced structures two modes of oscillations can be generated:

In phase mode / Out of phase mode

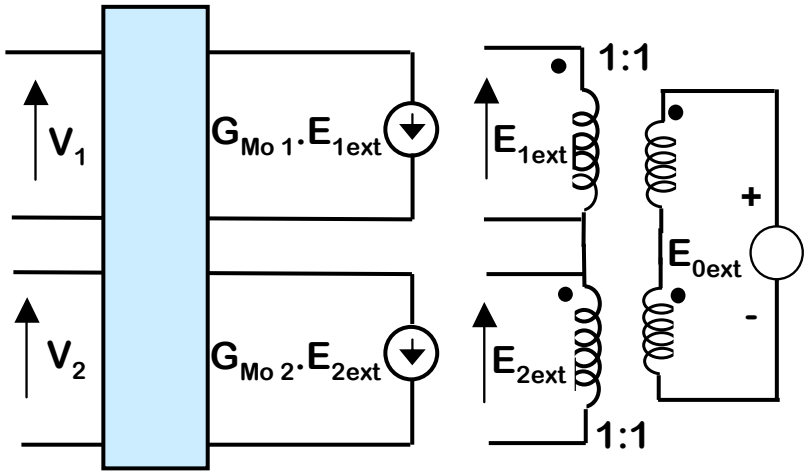

Oscillator circuit External excitation

In-phase excitation

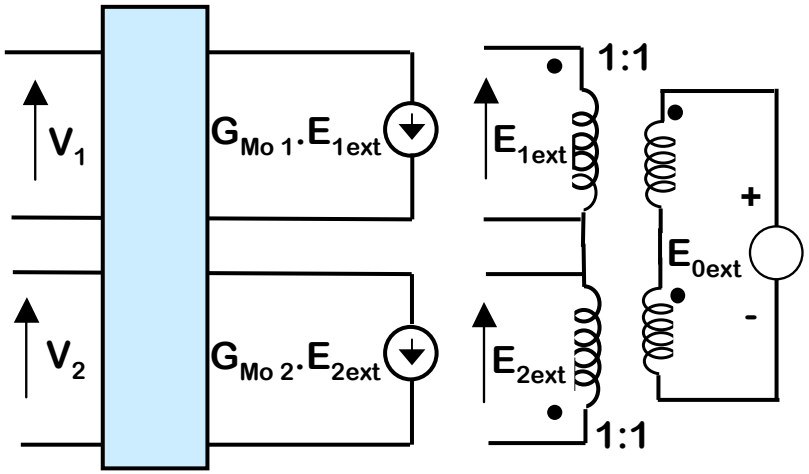

Oscillator circuit External excitation

Out of phase excitation

$$\tilde{G}_{OL}(j\omega) = \text{open loop gain} = \frac{\tilde{V}_1(j\omega)}{\tilde{E}_{1ext}(j\omega)}$$

Measurement : *Predicting parametric oscillations*

Hot S parameters

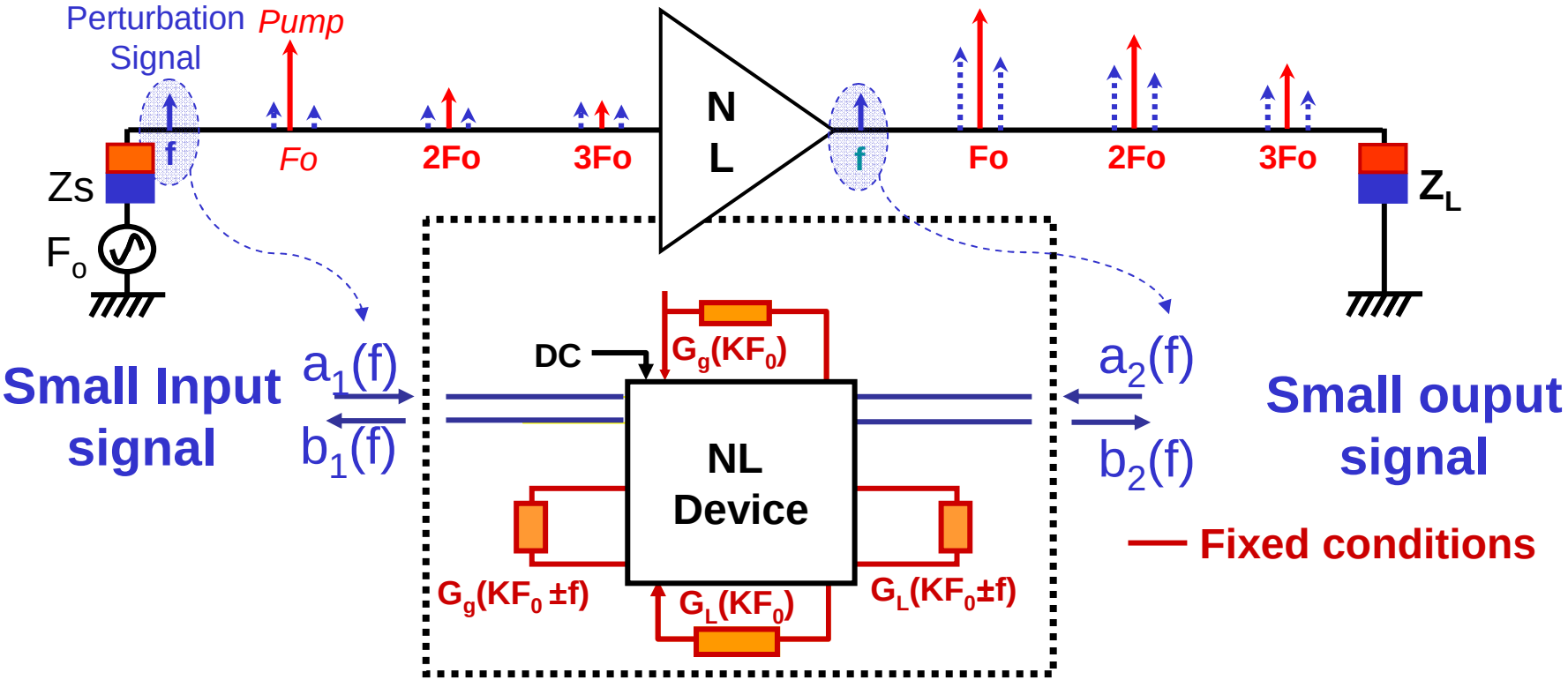

Two-ports model, Linear Time Invariant ➡ **Large Signal K-Factor**

Measurement : *HBT 6 fingers of 2x30 µm²*

Hot S-parameters extraction @ Z_{ch} n°2

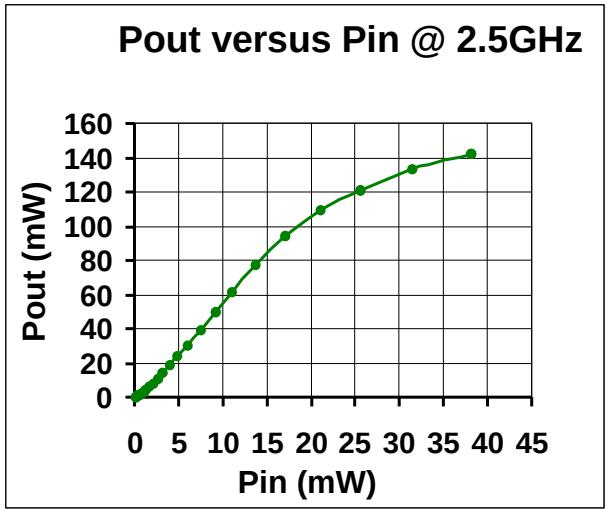

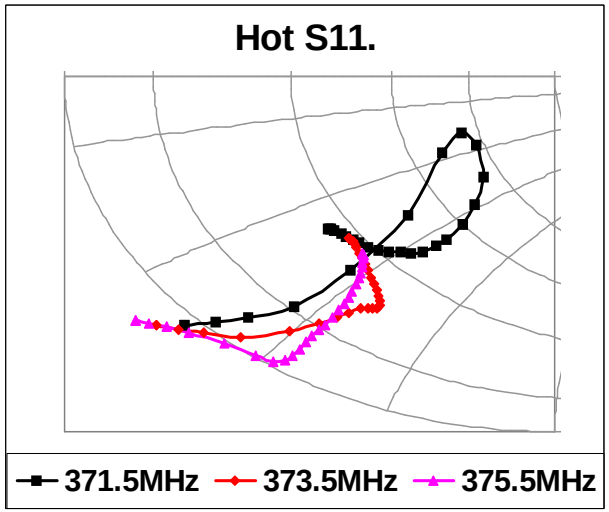

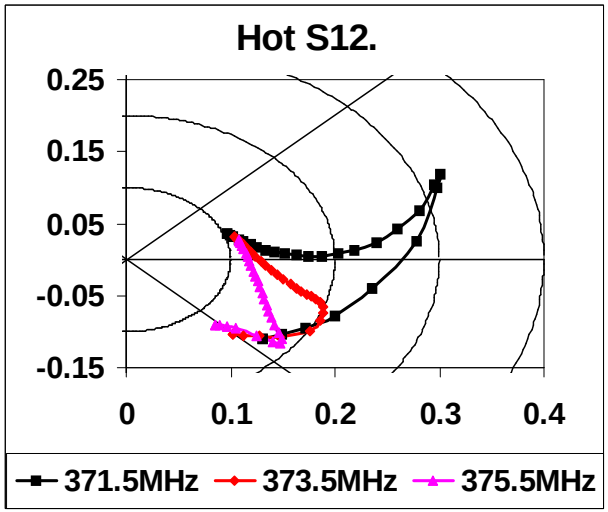

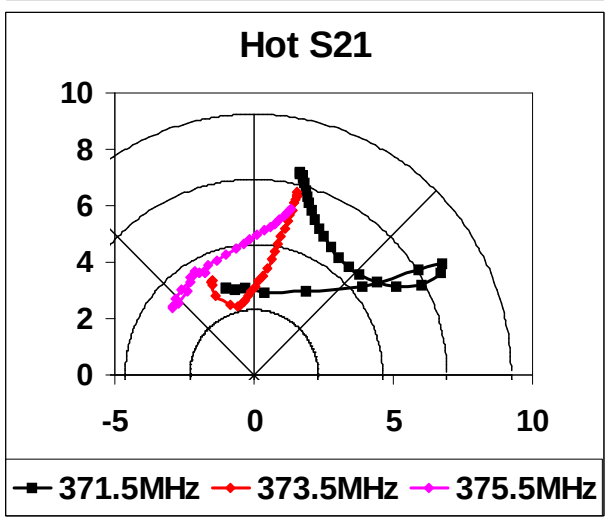

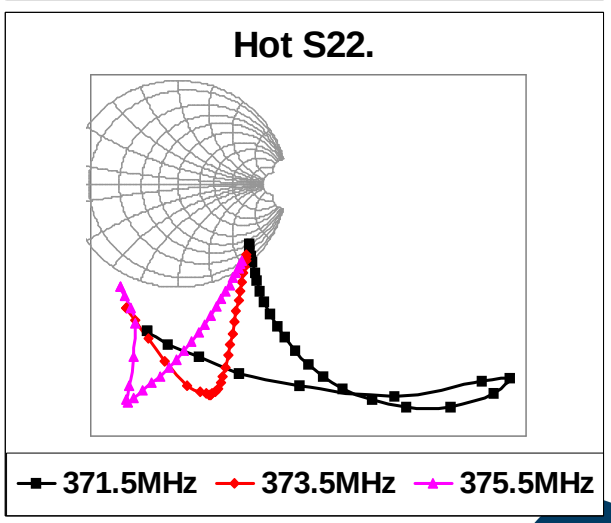

371.5 MHz

373.5 MHz

375.5 MHz

Measurement : *TBH 6 fingers of 2x30 µm2*

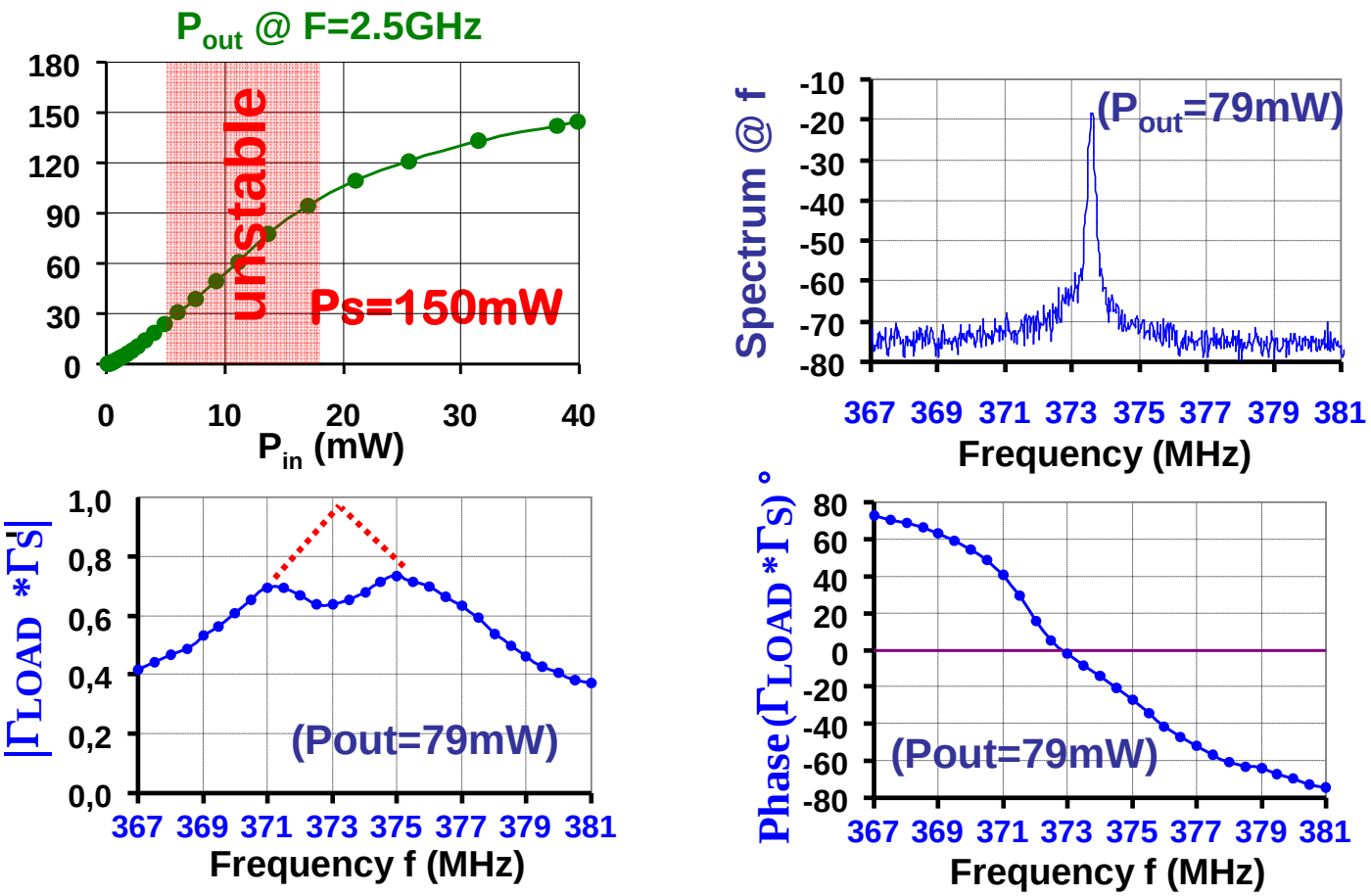

[2004] T. Gasseling, D. Barataud, S. Mons, J.M. Nebus, J.P. Villotte, J. Obregon, and R. Quéré, "Hot small-signal S-parameter measurements of power transistors operating under large-signal conditions in a load-pull environment for the study of nonlinear parametric interactions", *Microwave Theory and Techniques, IEEE Transactions on*, 2004

Measurement : *LSNA + HIP*

Applications for MMICs validation & Stability

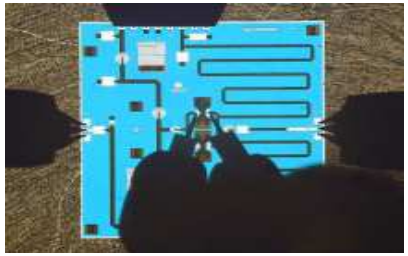

Class-F PA
f_{in}=1.8GHz - 2HBT AsGA

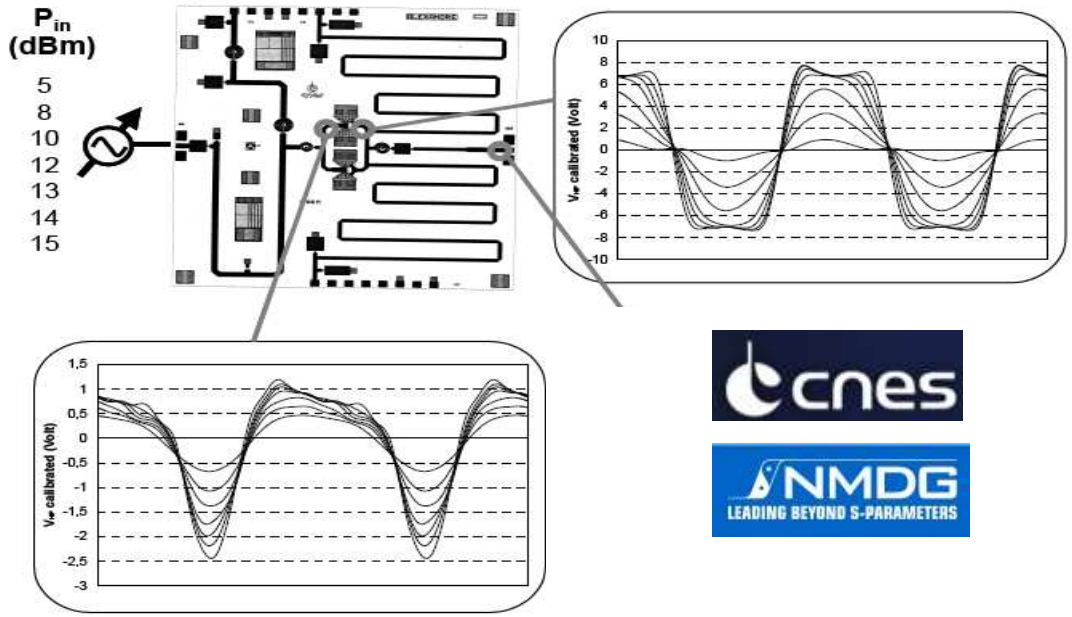

HIP enables easy detection of oscillations

LSNA enables phase measurements

Knowledge of nonlinear phenomena & Optimal design of PA

[2004] T. Reveyrand, A. Mallet, F. Gizard, Luc Lapierre, J.M. Nébus, M. Vanden Bossche, *«A new time domain waveform measurement setup to investigate internal node voltages in MMICs.»*, Microwave Technology and Technique Workshop, ESTEC, Noordwijk , May 2004

Measurement : *Parametric stability*

PERIODIC	Phase space	Spectra
Fundamental Harmonics	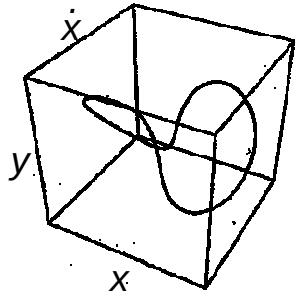 *Limit Cycle*	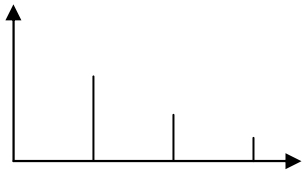
Rational Frequency division $r = \frac{\omega_1}{\omega_2} \in \mathbb{Q}$		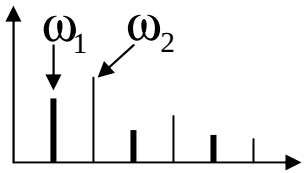
QUASI-PERIODIC		
Non rational Frequency division $r = \frac{\omega_1}{\omega_2} \notin \mathbb{Q}$	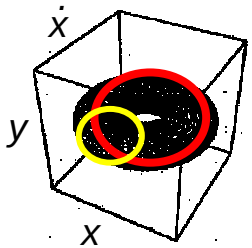 *Torus*	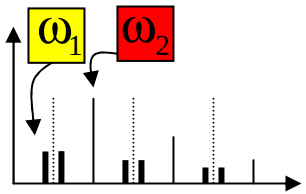
CHAOTIC		
Non periodic	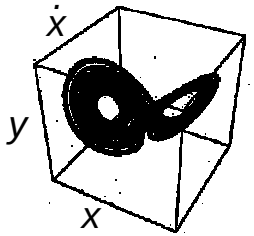 *Strange attractor*	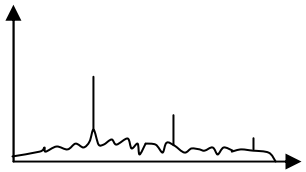

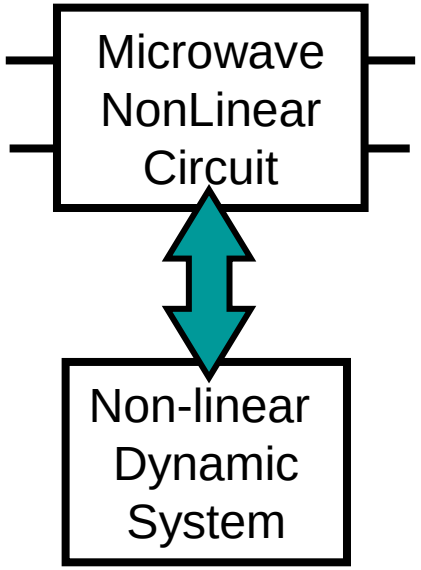

NL-ODE
Non-linear Ordinary Differential Equations

$$F_{NL}(x,\dot{x},y,\ldots)=0$$

Measurement : *LSNA + HIP*

Experimental verification of the oscillation mode

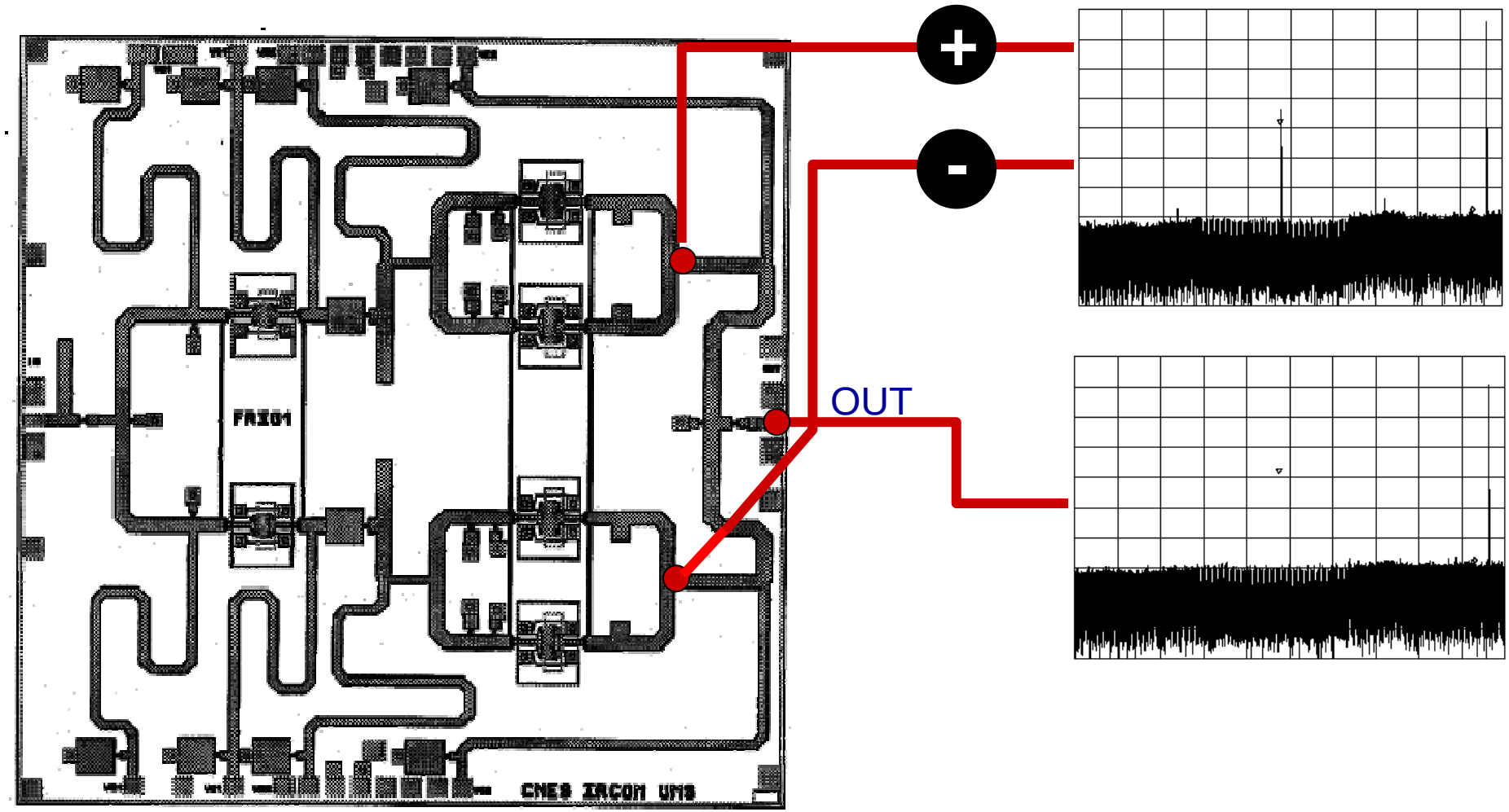

RF-SOC Problematic : *Outline*

Large device count → **thousands of transistors…**

Parasitic extraction → **tens of thousands of nodes…**

User implemented NDF and probing technique become impractical

- Cumbersome (large number of devices)
- Insecure (extensive number of internal loops)

Stability analysis based on Full nodal equation is necessary

- Numerical techniques for full nodal stability have matured
- May not be implemented by the designer
- Now available in some commercial CAD tools

Full nodal stability analysis : *Two approaches*

Modified nodal perturbation equation $Y(p)V(p)=0, \quad p=\sigma+j\omega$

Two approaches → **Nyquist method or Eigen value method**

Nyquist method → **Generalized NDF** $D(p)=\dfrac{\det[Y(p)]}{\det[Y_p(p)]}$

$$V(p)=\begin{bmatrix} V_A(p) \\ \hline V_p(p) \end{bmatrix} \begin{array}{l} \longrightarrow \text{transistors nodes (active)} \\ \longrightarrow \text{remaining nodes (passive)} \end{array} \Rightarrow Y(p)=\left[Y_A(p)\,|\,Y_P(p)\right]$$

Investigate the complex phase trajectory → $D(j\omega)/|D(j\omega)|$

The number of clockwise encirclements indicate instability and associated frequencies

Limitation → Pole-zero cancelation in determinant evaluation may hide some instability

CAD tools → Ansoft / Nexxim, Xpedion / GoldenGate

Full nodal stability analysis : *Nyquist method*

Nyquist method → generalized NDF

$$D(p) = \frac{\det[Y(p)]}{\det[Y_p(p)]} = |D(p)|e^{j\phi_{D(p)}}$$

Investigate the complex phase trajectory → $D(j\omega)/|D(j\omega)|$

The number of clockwise encirclements indicate instability and associated frequencies

Limitation → **Pole-zero cancelation in determinant evaluation may hide some instability**

CAD tools → **Ansoft/Nexxim, Xpedion/GoldenGate**

Full nodal stability analysis : *Eigen value method*

IMS 2009 JUNE 7-12 BOSTON MA

Eigen value method $$Y(p)V(p)=0, \quad p=\sigma+j\omega$$

Most RF circuits are modeled by R-L-C networks $Y(p)=[\,G+pC\,]$

Unstable circuit if Eigen values λ ***on the half right plane***

Imaginary part $j\omega$ ***of eigen value gives the frequency of instability***

$d\sigma/d\eta$ ***of eigen value gives a notion of stability margin versus the parameter*** η

Eigen value problem $$AV=-\lambda.V \quad A=G^{-1}C,\ \lambda=p^{-1}=\frac{\sigma-j\omega}{\sigma^2+\omega^2}$$

Efficient Krylov based numerical techniques and tool boxes available can solve very large systems

Limitation → Numerical instability for large problem size; apply well only to DC operating point stability

CAD tools → Xpedion/GoldenGate, Mentor/EldoRF

Xlim institut de recherche IEEE MTT-S cnrs

Full nodal stability analysis : *PCS chain*

1200 MOS + BJT

8000 nodes – extracted view

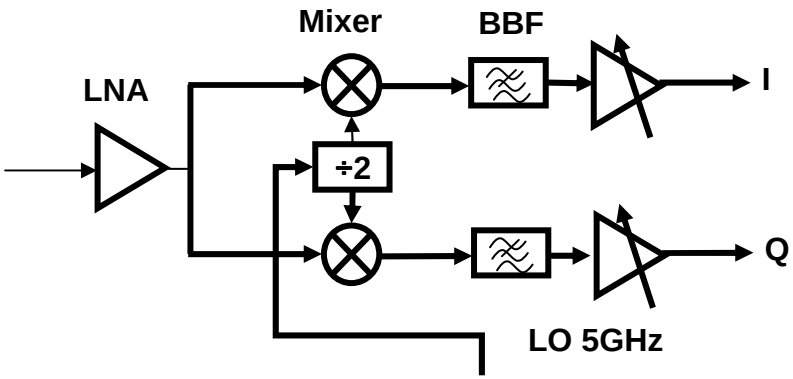

Nyquist method: 8 mn

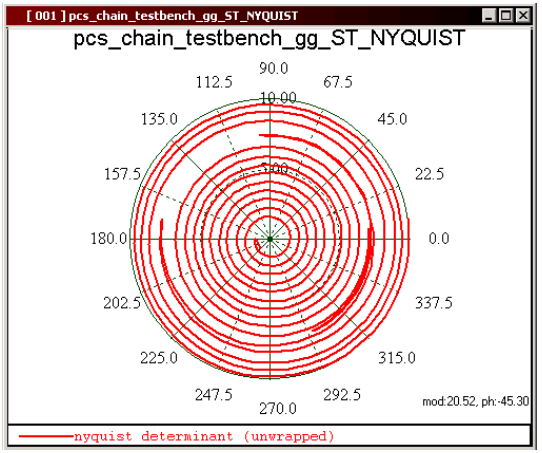

Instability freq: 0.2 GHz

Eigen value method: 4 mn

Unstable eigen value : [2 + j0.3] GHz

Parasitics creates a low frequency instability

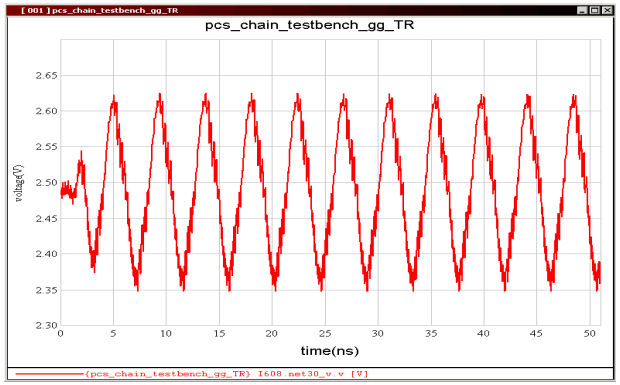

Transient simulation shows the 265 MHz low frequency oscillation

Conclusion

Simulation guide for designer

Small signal → S parameters → K-factor + NDF

Large signal@F_{in} → HB (mixer mode) → $ND_o = f(F_p)\big|_{P_{in}}$ + *Bode's analysis*

A simple and efficient way to detect and optimize stablity as a common parameters in a CAD commercialy tool (Stability margins are defined)

Open loop analysis is also the best way to design autonomous circuits (oscillator)

It's always necessary to have fine transistor modeling…

Measurement sets-up…

Hot S parameters → *for predicting parametric oscillation (Large signal K-factor)*

LSNA + HIP → *offers an unique experimental verification of even and odd oscillation modes*

…essential for the analysis of both operating conditions and reliability aspects

RF SOC problematic

Full Nodal Analysis → *Nyquist / Eigenvalue methods should be integrated in CAD utilities*